LONG SEAMS

COURSE	ORIENTATION
TOP (1)	0°
2	180°
3	0°
4	180°

*VERT – TOP TO BOTTOM

Ship loose items:
None

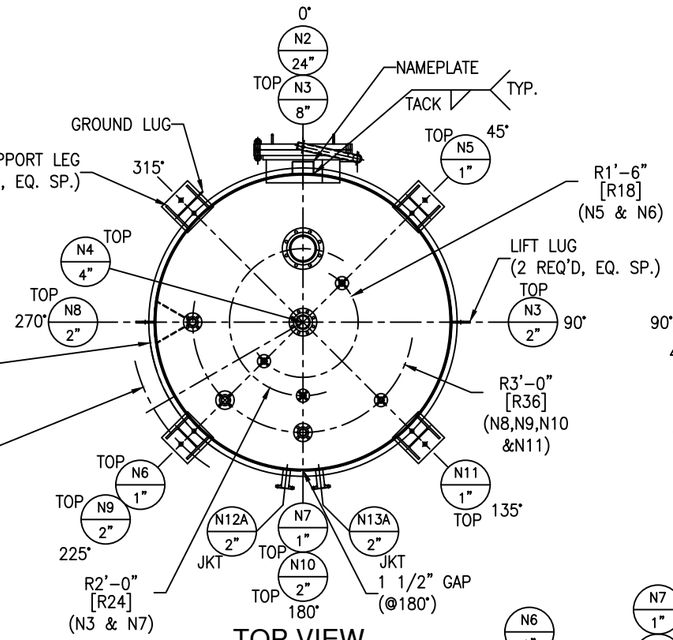

TOP VIEW

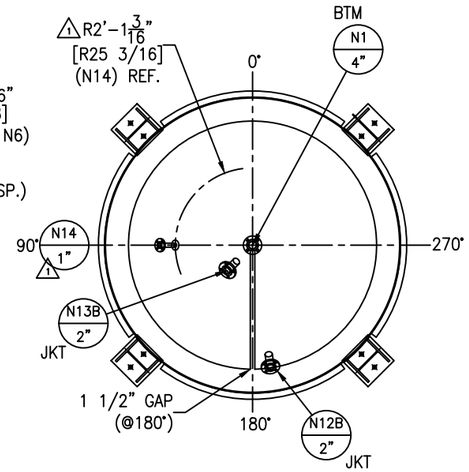

BOTTOM VIEW

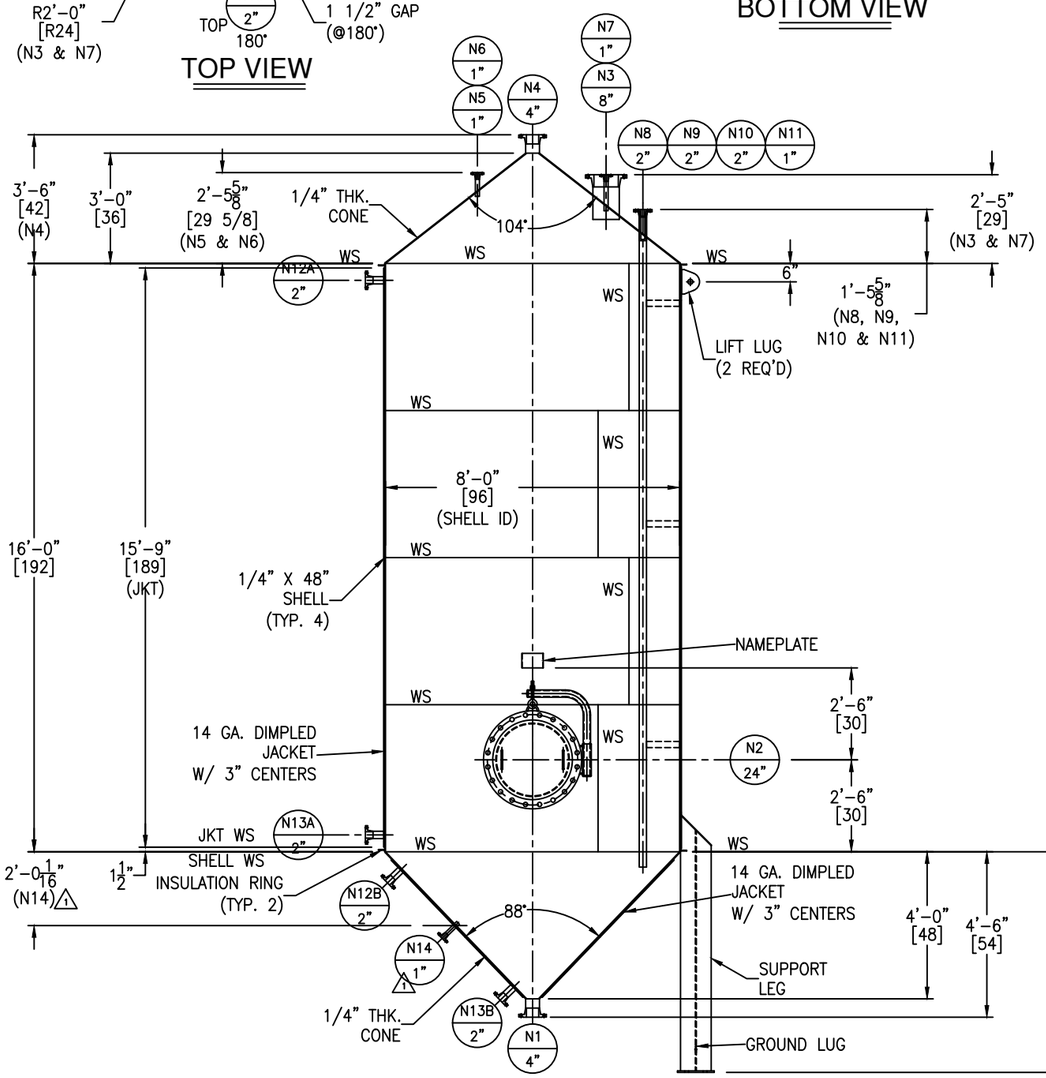

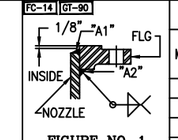

FIGURE NO. 1

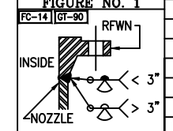

FIGURE NO. 2

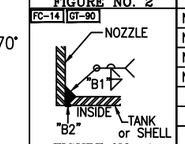

FIGURE NO. 4

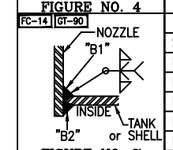

FIGURE NO. 7

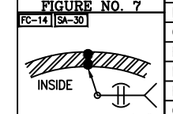

FIGURE NO. 9

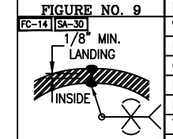

FIGURE NO. 10

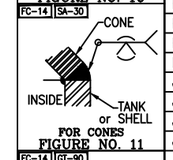

FIGURE NO. 11

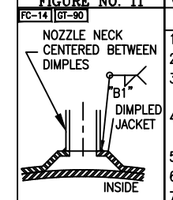

FIGURE NO. 13

NOZZLE SCHEDULE

MARK	SERVICE	SIZE	RATING	TYPE / STYLE	NECK SCHED.	PROJECTION EXT. (℄)	PROJECTION INT. (MIN.)	WELD FIGURE	REPAD SIZE (WIDTH X THK.)	WELD SIZE "A1"	"A2"	"B1"	"B2"	"C1"	"C2"
N1	BOTTOM OUTLET	4"	150#	RFWN	40S	SEE DWG.	–	2,4	–	–	–	3/16	3/16	–	–
N2	MANWAY/INSPECTION	24"	150#	RFSO W/ DAVIT	1/4"	8"	1"	1,7	–	1/4	3/8	1/4	3/16	–	–
N3	EMERGENCY VENT	8"	150#	RFWN	40S	SEE DWG.	1"	2,7	–	–	–	3/16	3/16	–	–
N4	LEVEL SENSOR	4"	150#	RFWN	40S	SEE DWG.	–	2,4	–	–	–	3/16	3/16	–	–
N5	WASH NOZZLE	1"	150#	RFWN	40S	SEE DWG.	1"	2,7	–	–	–	3/16	3/16	–	–
N6	WASH NOZZLE	1"	150#	RFWN	40S	SEE DWG.	1"	2,7	–	–	–	3/16	3/16	–	–
N7	HIGH LEVEL NOZZLE	1"	150#	RFWN	40S	SEE DWG.	1"	2,7	–	–	–	1/4	3/16	–	–
N8	FILL LINE	2"	150#	RFWN	40S	SEE DWG.	SEE DWG.	2,7	–	–	–	1/4	3/16	–	–
N9	TRUCK VAPOR RETURN	2"	150#	RFWN	40S	SEE DWG.	1"	2,7	–	–	–	1/4	3/16	–	–
N10	PRVR/CONSERVATION VENT	2"	150#	RFWN	40S	SEE DWG.	1"	2,7	–	–	–	3/16	3/16	–	–
N11	BLANKETING VALVE	1"	150#	RFWN	40S	SEE DWG.	1"	2,7	–	–	–	3/16	3/16	–	–
N12A	SHELL JACKET INLET	2"	150#	RFWN	40S	6"	–	2,13	–	–	–	3/16	–	–	–
N12B	BTM JACKET INLET	2"	150#	RFWN	40S	6"	–	2,13	–	–	–	3/16	–	–	–
N13A	SHELL JACKET OUTLET	2"	150#	RFWN	40S	6"	–	2,13	–	–	–	3/16	–	–	–
N13B	BTM JACKET OUTLET	2"	150#	RFWN	40S	6"	–	2,13	–	–	–	3/16	–	–	–
N14	THERMOWELL	1"	150#	RFWN	40S	6"	1"	2,7	–	–	–	3/16	3/16	–	–

MATERIALS OF CONSTRUCTION

	VESSEL
SHELL	SA240–316/316L
HEADS	SA240–316/316L
RIM ANGLE	–
NOZZLE NECKS	SA312–316/316L WLD
NOZZLE FLANGES	SA182F–316/316L
MANWAY NECKS	SA240–316/316L
MANWAY FLANGES	SA182F–316/316L
GASKETS	GARLKOCK 3000
BOLTS/STUDS	SA193–B7 (ZINC PLATED)
NUTS	SA184–2H (ZINC PLATED)
REPADS	SA240–304/304L
COUPLINGS	–
SUPPORTS/HOLD DOWNS	SA36
LIFTING LUGS	SA240–304/304L
VACUUM RINGS	–
INSULATION RINGS	SA240–304/304L
GROUND LUG	SA36
BAFFLE	–
LADDER	–
TANK CLIPS (LADDER)	–
HANDRAIL	–
HANDRAIL CLIPS	–
PLATFORM	–
PLATFORM CLIPS	–
DIPTUBE SUPPORT	–
JACKET SHELL	SA240–304/304L
JACKET BOTTOM HEAD	SA240–304/304L
JACKET NOZZLE NECKS	SA312–304/304L WLD
JACKET NOZZLE FLANGES	SA182F–304/304L

DESIGN DATA

	VESSEL
DESIGN AND FAB. CODE	ASME SEC. VIII DIV. 1
CERT. STAMP REQ'D.	NO
DESIGN PRESSURE	25 PSIG
DESIGN TEMPERATURE	250° F
MIN. DESIGN METAL TEMP.	–20° F @ 25 PSIG
OPERATING PRESSURE	–
OPERATING TEMPERATURE	–
JOINT EFFICIENCY HEADS	0.70
JOINT EFFICIENCY SHELL	0.70
CORROSION ALLOWANCE	0"
SPECIFIC GRAVITY	1.0
EARTHQUAKE ZONE	Ss = (0.209) S1 = (0.088)
WIND LOAD	105 MPH
STRESS RELIEF	NOT REQ'D
RADIOGRAPHIC EXAM	NOT REQ'D
DYE PENETRANT EXAM	NOT REQ'D
MAGNETIC PARTICLE EXAM	NOT REQ'D
HYDROSTATIC TEST	–
PNEUMATIC TEST	28 PSIG / GAUGE #11
JKT DESIGN AND FAB. CODE	ASME
JKT CERT. STAMP REQ'D.	YES
JKT DESIGN PRESSURE	100 PSIG
JKT DESIGN TEMPERATURE	250° F
JKT MIN. DESIGN METAL TEMP.	–20° F @ 100 PSIG
JKT OPERATING PRESSURE	–
JKT OPERATING TEMPERATURE	–
JKT JOINT EFFICIENCY HEADS	0.70
JKT JOINT EFFICIENCY SHELL	0.70
JKT HYDRO TEST	130 PSIG / GAUGE #9

GENERAL NOTES

1.) COVER ALL FLANGES, OPENINGS & MACHINED SURFACES PRIOR TO SHIPMENT UNLESS OTHERWISE NOTED.
2.) BOLT HOLES TO STRADDLE 0° & 180° UNLESS OTHERWISE NOTED.
3.) REPADS TO HAVE (1) ø1/4" NPT TELL–TALE HOLES FOR PNEUMATIC TESTING AT 2 PSIG FOR PRESSURE RETAINING PARTS. ALL OTHER REPADS TO HAVE (1) ø1/4" WEEP HOLE AT LOWEST POINT ON PAD.
4.) ASME CODE VESSELS TO BE IN ACCORDANCE WITH UG–80 & UG–81. TOLERANCES: +/– 1/8" FOR DIMENSIONS AND +/– 2 DEGREES FOR ORIENTATIONS.
5.) ASME MATERIALS TO CONFORM TO THE FOLLOWING: FLANGES – B16.5, FITTINGS – B16.9 & COUPLINGS – B16.11.
6.) PICKLE ALL EXTERIOR WELDS. PASSIVATE INTERIOR & EXTERIOR OF VESSEL.
7.) PAINTING – (LEGS & GROUND LUG) SANDBLAST SP6. (1) COAT MACROPOXY 646 HAZE GREY (5–7 MILS) PRIMER

VESSEL FINISH

INTERIOR WELD TREATMENT:	SAV TANK STANDARD
EXTERIOR WELD TREATMENT:	SAV TANK STANDARD
SAV TANK FINISHING STANDARD:	SEE NOTE 6
INSULATION:	2" BY OTHERS
PAINTING:	SEE NOTE 7

VESSEL CAPACITY AND WEIGHTS

OPERATING CAPACITY	–
FULL CAPACITY	6,910 GAL.
EMPTY SHIPPING WEIGHT	8,600 LBS.
WEIGHT FULL OF WATER	66,300 LBS.
WEIGHT FULL OF PRODUCT	66,300 LBS.

This drawing is issued for customer approval. please review, make approval changes (if any) in red. check the appropriate box, sign & date.

- ☐ Approval – no changes. Please proceed with fabrication.
- ☐ Approved as noted. Please proceed with fabrication
- ☐ Not approved. Please make changes and resubmit.

Customer signature _____ Date _____

ASME SECT. VIII, DIV. 1
2021 EDITION

ENG. _____ DATE: _____
Q.C. _____ DATE: _____
A.I. _____ DATE: _____

REVISIONS

REV	D.BY	C.BY	DATE	DESCRIPTION
2				AS BUILT
1	NS	RS	1/26/23	CERTIFIED
0	NS	RS	12/13/22	APPROVAL

Savannah Tank & Equipment Corp.
1517 Telfair Road, Savannah, GA 31415
(912) 233–8902

DRAWN BY: NS
CHK'D BY: RS
APPROVED BY: NP
SCALE: 3/8" = 1'–0"

AJAY NORTH AMERICA, LLC
6,000 GAL. ASME STORAGE TANK
EQUIP. #
CUST. PO # 20375

DRAWING NO.: 122–22–1 SHT 1 OF 4 REV. SET 1

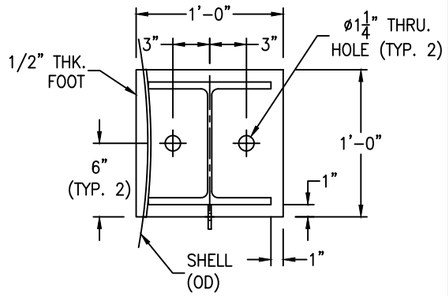

FOOT/LEG DETAIL

(4 REQ'D) SCALE: 1 1/2" = 1'-0"

FC-14

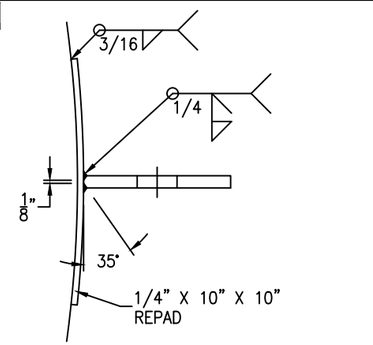

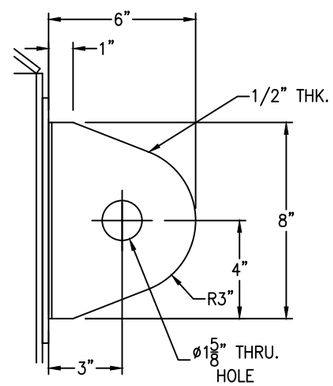

LIFT LUG DETAIL

(2 REQ'D) SCALE: 3 = 1'-0"

FC-14

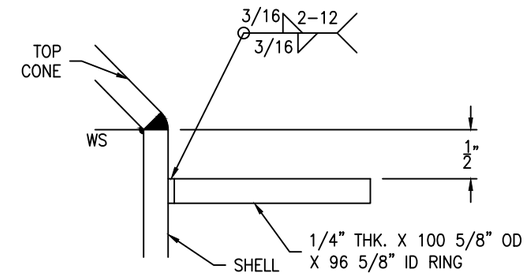

TOP INSULATION RING DETAIL

(1 REQ'D) SCALE: 6" = 1'-0"

FC-14

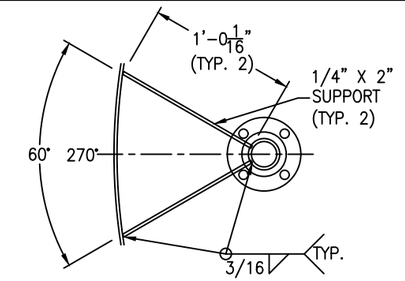

NOZ. N8 DIPTUBE SUPPORT

(3 REQ'D) SCALE: 6" = 1'-0"

FC-38
FC-39
FC-14

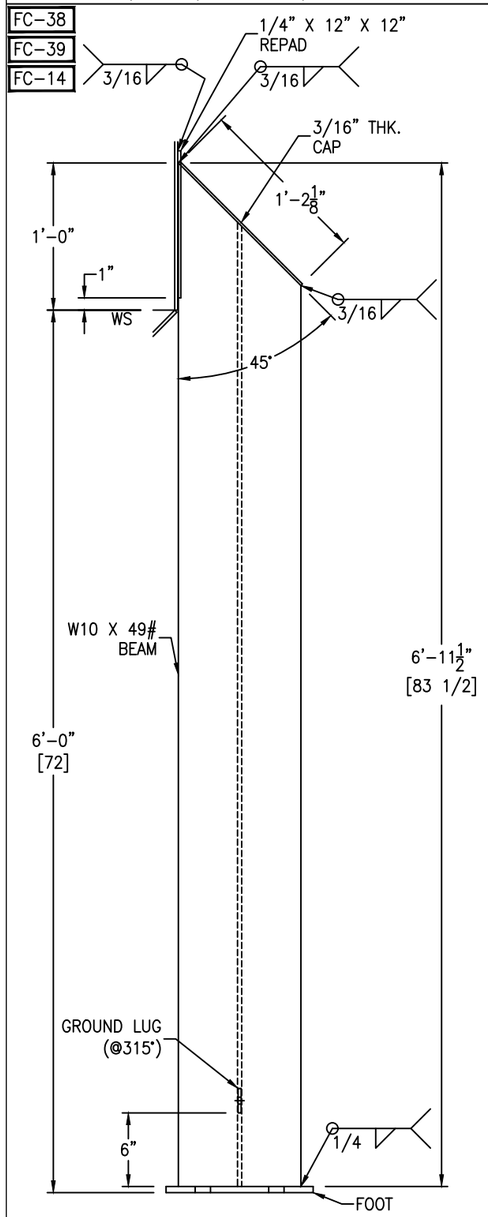

SUPPORT LEG DETAIL

(4 REQ'D) SCALE: 1 1/2" = 1'-0"

FC-14

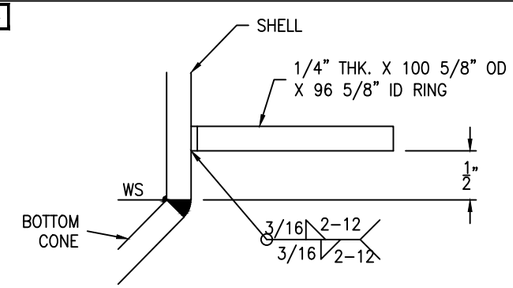

BOTTOM INSULATION RING DETAIL

(1 REQ'D) SCALE: 6" = 1'-0"

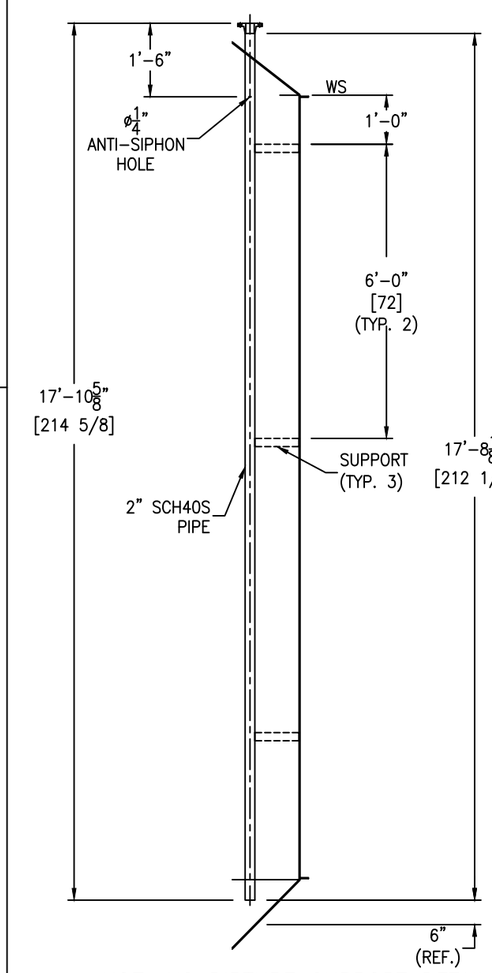

NOZ. N8 DIPTUBE SUPPORT DETAIL

SCALE: 1/2" = 1'-0"

FC-14

*** GROUND LUG @ 315°***

GROUND LUG DETAIL

(1 REQ'D) SCALE: 1'-0" = 1'-0"

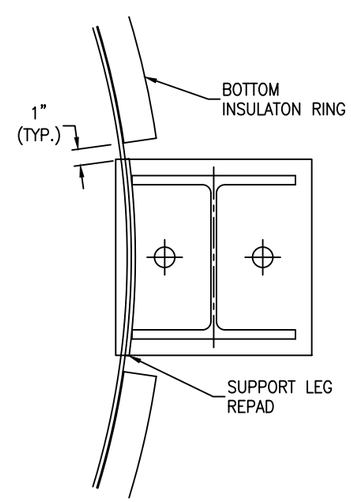

BOTTOM INSULATION RING CUT-OUT DETAIL

(4 REQ'D) SCALE: 2" = 1'-0"

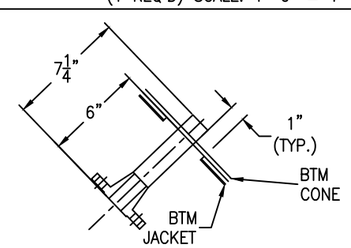

⚠1 NOZ. N14 DETAIL

(1 REQ'D) SCALE: 2" = 1'-0"

REV	D.BY	C.BY	DATE	DESCRIPTION
2				AS BUILT
1	NS	RS	1/26/23	CERTIFIED
0	NS	RS	12/13/22	APPROVAL

⚠1 REVISIONS

Savannah Tank & Equipment Corp.
1517 Telfair Road, Savannah, GA 31415
(912) 233-8902

DRAWN BY:	NS
CHK'D BY:	RS
APPROVED BY:	NP
SCALE:	1/2" = 1'-0"

AJAY NORTH AMERICA, LLC
6,000 GAL. ASME STORAGE TANK
EQUIP. #
CUST. PO # 20375

DRAWING NO.: 122-22-2 | SHT 2 OF 4 | REV. SET 1

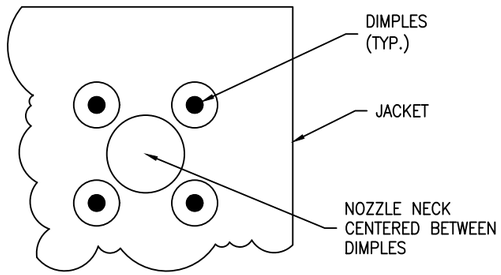

DIMPLED JACKET NOZZLE N12A & N13A DETAIL

SCALE: 4" = 1'-0"

FC-14
GT-11

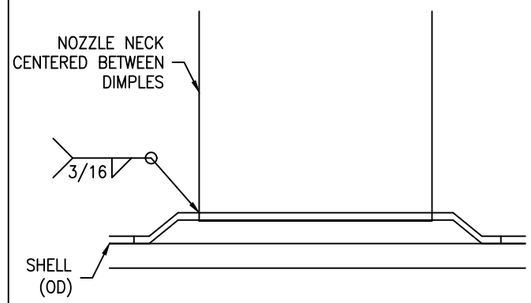

DIMPLED JACKET NOZZLE DETAIL

SCALE: 1'-0" = 1'-0"

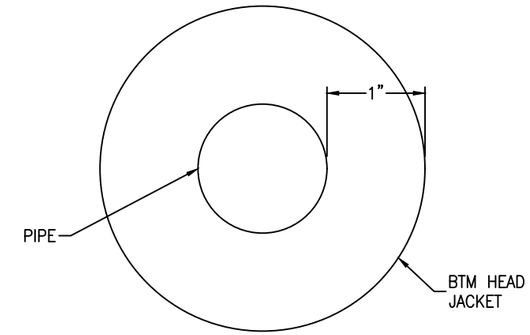

JACKET CUT-OUT AT NOZ. N14 DETAIL

SCALE: 1 1/2" = 1'-0"

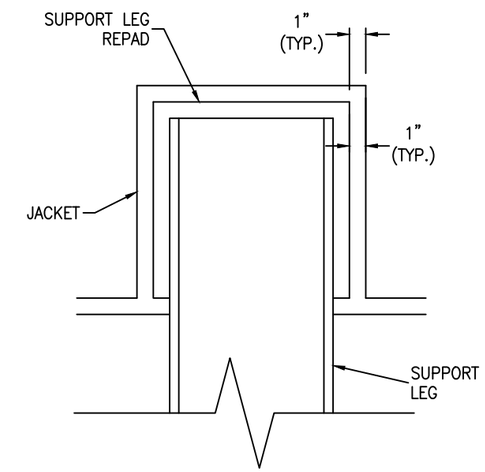

JACKET CUT-OUT AT LEG DETAIL

(4 REQ'D) SCALE: 1 1/2" = 1'-0"

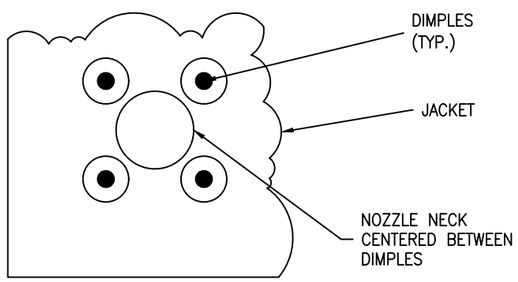

DIMPLED JACKET NOZZLE N12B & N13B DETAIL

SCALE: 4" = 1'-0"

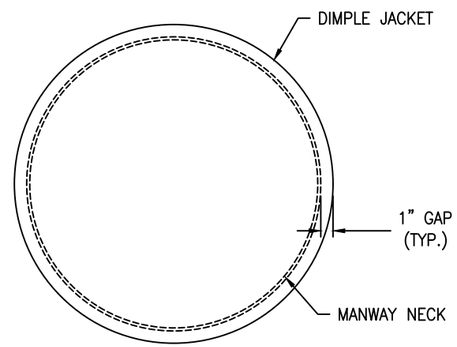

*NOTE: MANWAY FLANGE AND DAVIT ASSEMBLY IS NOT SHOWN FOR CLARITY PURPOSE.

JACKET CUT-OUT AT MANWAY DETAIL

SCALE: 1 1/2" = 1'-0"

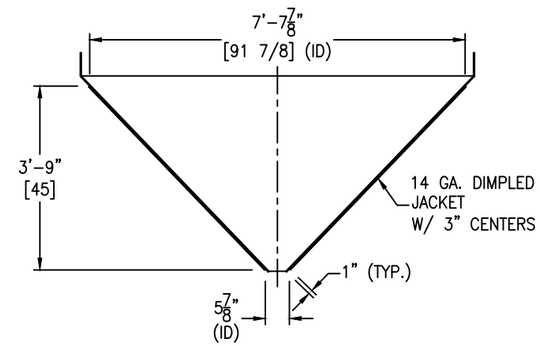

BTM CONE JACKET DETAIL

SCALE: 1/2" = 1'-0"

FC-14
GT-11

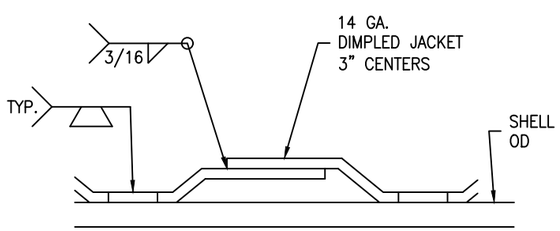

CONE/SHELL DIMPLED JACKET DETAIL

SCALE: 1'-0" = 1'-0"

FC-14

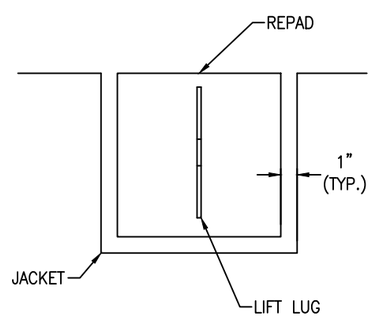

JACKET CUT-OUT AT LIFT LUG DETAIL

(2 REQ'D) SCALE: 2" = 1'-0"

REV	D.BY	C.BY	DATE	DESCRIPTION
2				AS BUILT
1	NS	RS	1/26/23	CERTIFIED
0	NS	RS	12/13/22	APPROVAL

⚠ REVISIONS

Savannah Tank & Equipment Corp.
1517 Telfair Road, Savannah, GA 31415
(912) 233-8902

DRAWN BY: NS
CHK'D BY: RS
APPROVED BY: NP
SCALE: 1/2" = 1'-0"

AJAY NORTH AMERICA, LLC
6,000 GAL. ASME STORAGE TANK
EQUIP. #
CUST. PO # 20375

DRAWING NO.: 122-22-3 SHT 3 OF 4 REV. SET 1

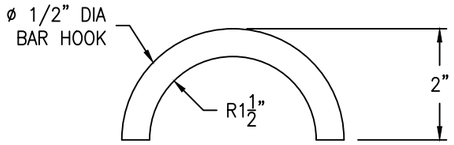

HOOK DETAIL

(1 REQ'D) SCALE: 6" = 1'-0"

FC-14

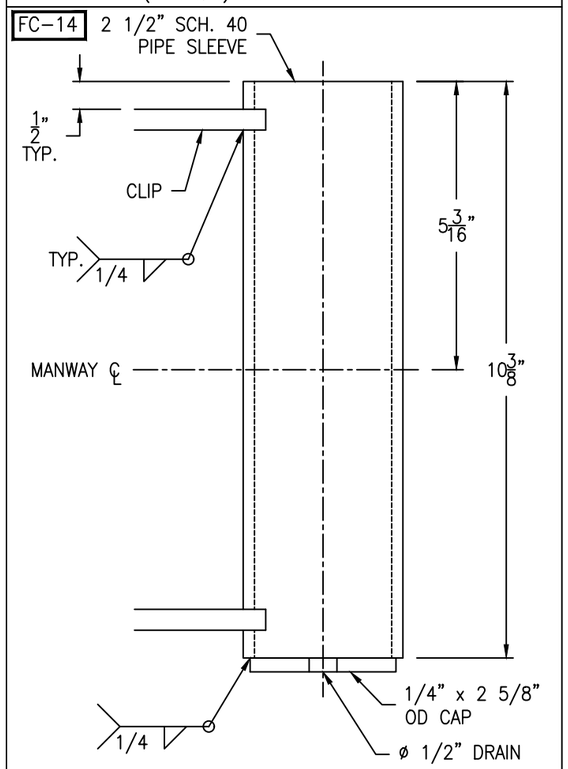

SLEEVE DETAIL

(1 REQ'D) SCALE: 6" = 1'-0"

FC-14

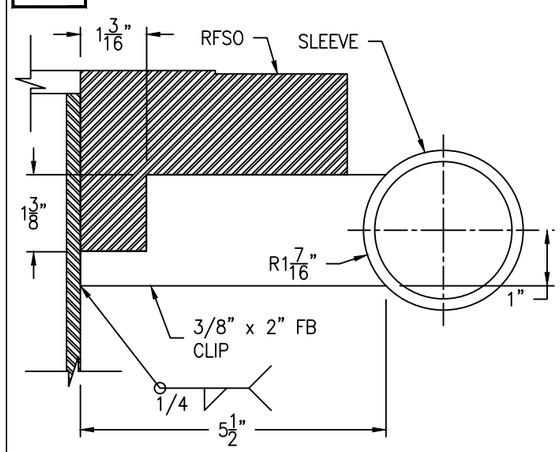

CLIP DETAIL

(2 REQ'D) SCALE: 6" = 1'-0"

FC-14

Bolting for blind
(20) 1 1/4-7 NC x 7" STUD
(40) 1 1/4-7 NC HH NUT
(1) 24" 150# RING GASKET x 1/8"

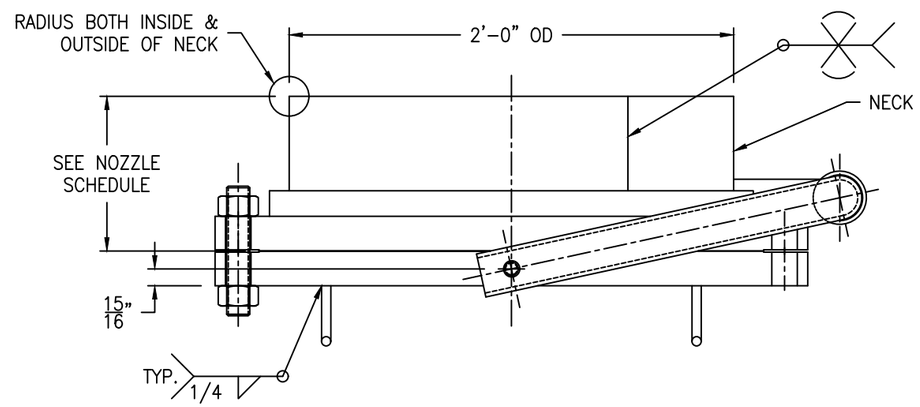

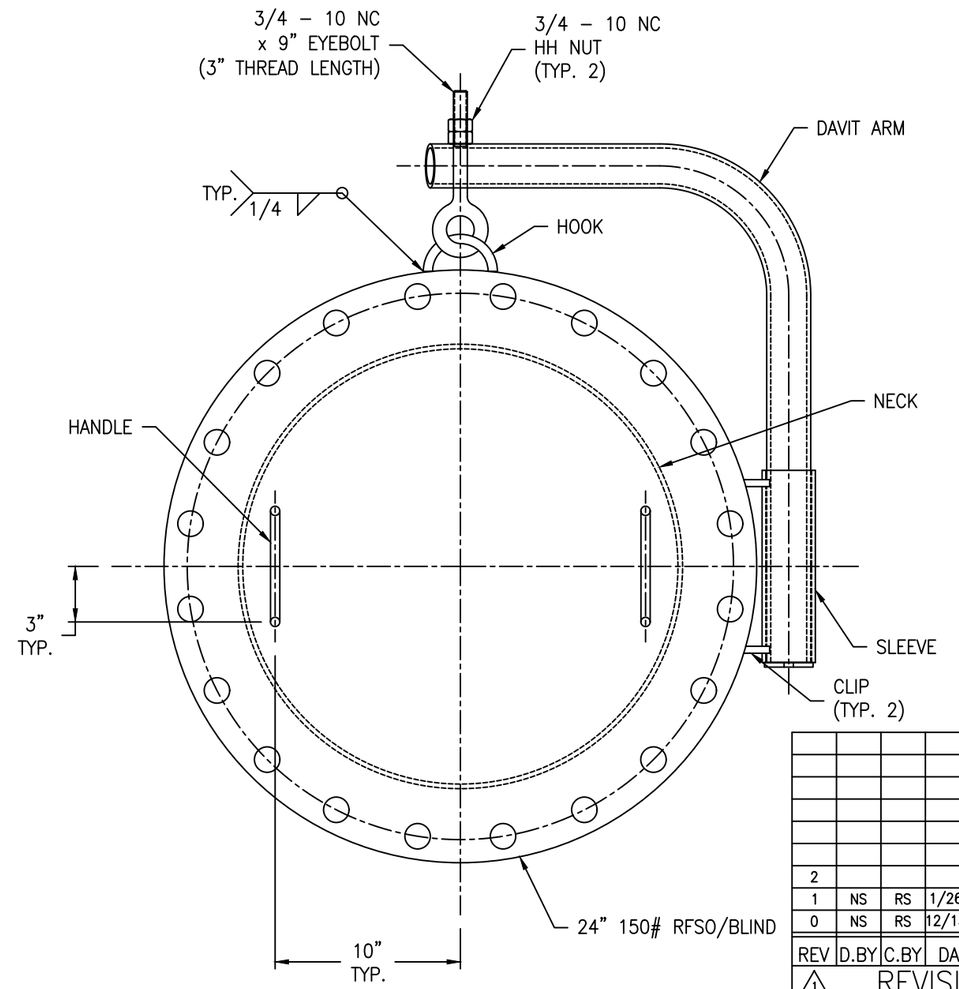

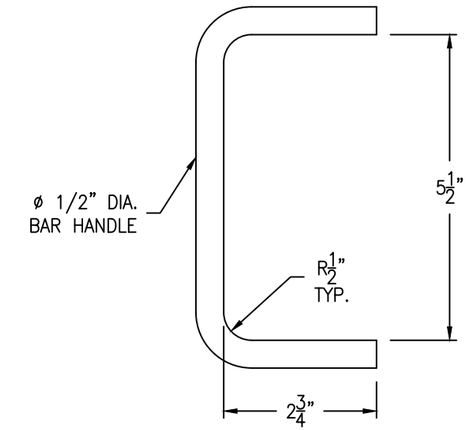

HANDLE DETAIL

(2 REQ'D) SCALE: 6" = 1'-0"

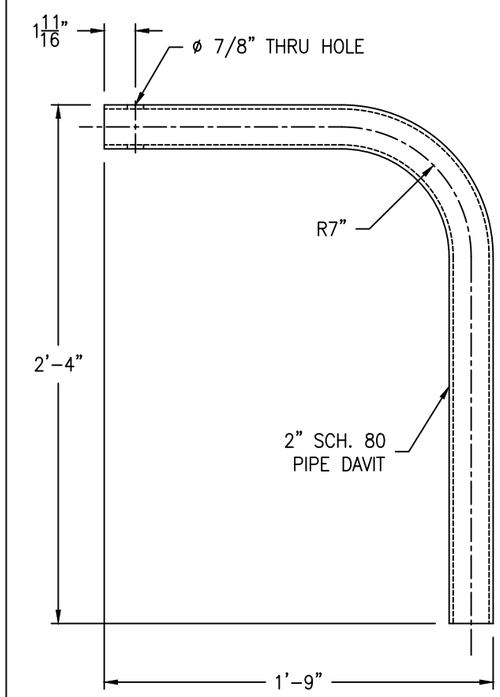

DAVIT ARM DETAIL

(1 REQ'D) SCALE: 2" = 1'-0"

REV	D.BY	C.BY	DATE	DESCRIPTION
2				AS BUILT
1	NS	RS	1/26/23	CERTIFIED
0	NS	RS	12/13/22	APPROVAL

REVISIONS

Savannah Tank & Equipment Corp.
1517 Telfair Road, Savannah, GA 31415
(912) 233-8902

DRAWN BY: NS
CHK'D BY: RS
APPROVED BY: NP
SCALE: 2" = 1'-0"

AJAY NORTH AMERICA, LLC
6,000 GAL. ASME STORAGE TANK
EQUIP. #
CUST. PO # 20375

DRAWING NO.: 122-22-4 SHT 4 OF 4 REV. SET 1